LONG SEAMS	
COURSE	ORIENTATION
TOP	65°
2	75°

*VERT – TOP TO BOTTOM

NOTE: SEE SHEET #2 FOR BOTTOM ANGLE CUTOUT DETAIL

Ship loose items:
None

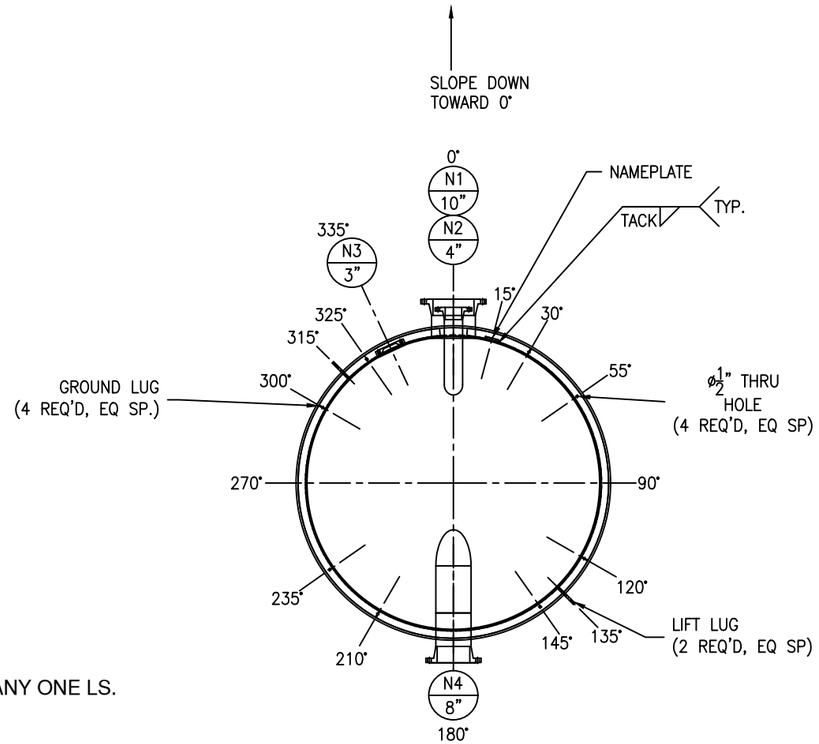

*NOTE 8: (1) SPOT ON ANY ONE LS.

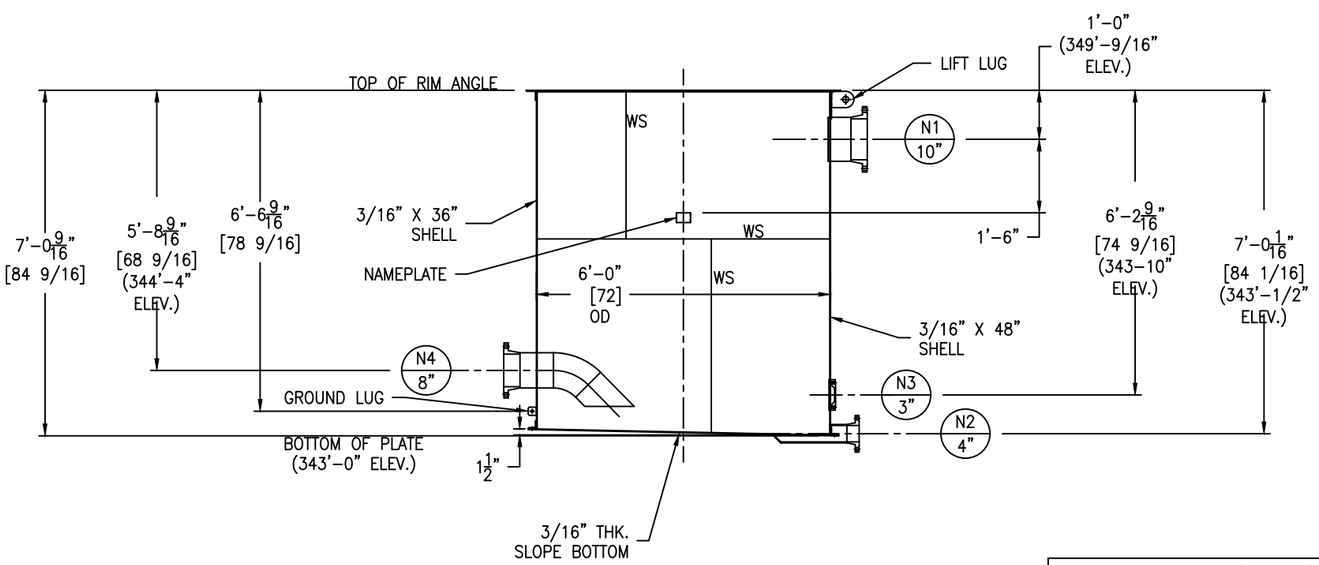

IPC DWG NO. 010-1036-093

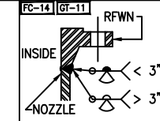

FIGURE NO. 2

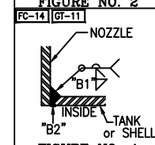

FIGURE NO. 4

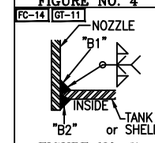

FIGURE NO. 7

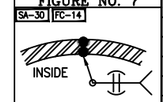

SHELL THK. < 5/16"

FIGURE NO. 9

NOZZLE SCHEDULE

MARK	SERVICE	SIZE	RATING	TYPE / STYLE	NECK SCHED.	PROJECTION EXT. (℄)	PROJECTION INT. (MIN.)	WELD FIGURE	REPAD SIZE (WIDTH X THK.)	WELD SIZE "A1"	"A2"	"B1"	"B2"	"C1"	"C2"
N1	OVERFLOW	10"	150#	RFWN	40	9"	–	2,4	–	–	–	1/4	3/16	–	–
N2	DRAIN	4"	150#	RFWN	40	SEE DWG.	–	2,4	–	–	–	1/2	3/16	–	–
N3	LEVEL TRANSMITTER	3"	–	SPECIAL STUD PAD	–	–	–	4	–	–	–	3/16	3/16	–	–
N4	PUMP SUCTION	8"	150#	RFWN	40	SEE DWG.	SEE DWG.	2,7	–	–	–	1/4	1/4	–	–

MATERIALS OF CONSTRUCTION

	VESSEL
SHELL	SA240-304/304L
BOTTOM	SA240-304/304L
RIM ANGLE	SA479-304/304L
NOZZLE NECKS	SA312-304/304L WLD & SA403-304/304L WPW
NOZZLE FLANGES	SA182F-304/304L
STUDPAD	SA182F-304/304L
MANWAY NECKS	–
MANWAY FLANGES	–
BOLTS/STUDS	–
NUTS	–
REPADS	–
COUPLINGS	–
SUPPORTS/HOLD DOWNS	–
LIFTING LUGS	SA240-304/304L
VACUUM RINGS	–
INSULATION RINGS	–
GROUND LUG	SA240-304/304L
BAFFLE	–
LADDER	–
TANK CLIPS (LADDER)	–
HANDRAIL	–
HANDRAIL CLIPS	–
PLATFORM	–
PLATFORM CLIPS	–
DIPTUBE SUPPORT	–
JACKET SHELL	–
JACKET HEADS	–
JACKET NOZZLE NECKS	–
JACKET NOZZLE FLANGES	–

DESIGN DATA

	VESSEL
DESIGN AND FAB. CODE	API 650
CERT. STAMP REQ'D.	NO
DESIGN PRESSURE	ATM
DESIGN TEMPERATURE	149.9° F
MIN. DESIGN METAL TEMP.	-20° F @ ATM
OPERATING PRESSURE	ATM
OPERATING TEMPERATURE	MIN. 104° F / MAX. 122° F
JOINT EFFICIENCY HEADS	0.70
JOINT EFFICIENCY SHELL	0.70
CORROSION ALLOWANCE	0"
SPECIFIC GRAVITY	1.02
EARTHQUAKE ZONE	Ss (0.157) S1 (0.08)
WIND LOAD	INDOOR
STRESS RELIEF	NOT REQ'D
RADIOGRAPHIC EXAM	SPOT (PER CUSTOMER) SEE NOTE 8
DYE PENETRANT EXAM	SEE NOTE 7
MAGNETIC PARTICLE EXAM	NOT REQ'D
HYDROSTATIC TEST	–
PNEUMATIC TEST	–
JKT HYDRO TEST	–
JKT DESIGN AND FAB. CODE	–
JKT CERT. STAMP REQ'D.	–
JKT DESIGN PRESSURE	–
JKT DESIGN TEMPERATURE	–
JKT MIN. DESIGN METAL TEMP.	–
JKT OPERATING PRESSURE	–
JKT OPERATING TEMPERATURE	–
JKT JOINT EFFICIENCY HEADS	–
JKT JOINT EFFICIENCY SHELL	–

VESSEL FINISH

INTERIOR WELD TREATMENT:	SAV TANK STANDARD
EXTERIOR WELD TREATMENT:	SAV TANK STANDARD
SAV TANK FINISHING STANDARD:	SEE NOTE 6
INSULATION:	N/A
PAINTING:	N/A

VESSEL CAPACITY AND WEIGHTS

OPERATING CAPACITY	1,100 GAL.
FULL CAPACITY	1,400 GAL.
EMPTY SHIPPING WEIGHT	1,800 LBS.
WEIGHT FULL OF WATER	14,100 LBS.
WEIGHT FULL OF PRODUCT	14,300 LBS.

QUALITY CONTROL

ENG. _____ DATE: _____

Q.C. _____ DATE: _____

This drawing is issued for customer approval. please review, make approval changes (if any) in red. check the appropriate box, sign & date.

- ☐ Approval – no changes. Please proceed with fabrication.
- ☐ Approved as noted. Please proceed with fabrication
- ☐ Not approved. Please make changes and resubmit.

Customer signature _____ Date _____

GENERAL NOTES

1.) COVER ALL FLANGES, OPENINGS & MACHINED SURFACES PRIOR TO SHIPMENT UNLESS OTHERWISE NOTED.
2.) BOLT HOLES TO STRADDLE 0° & 180° UNLESS OTHERWISE NOTED.
3.) NOZZLE REPADS TO HAVE (1) ø1/4" TELL-TALE HOLES ON HORIZONTAL CENTER LINE.
ALL OTHER REPADS TO HAVE (1) ø1/4" WEEP HOLE AT LOWEST POINT ON PAD.
4.) MANUFACTURING TOLERANCE TO BE IN ACCORDANCE WITH API STANDARD 650 7.5.
5.) ASME MATERIALS TO CONFORM TO THE FOLLOWING: FLANGES – B16.5, FITTINGS – B16.9 & COUPLINGS – B16.11.
6.) PICKLE ALL EXTERIOR WELDS. PASSIVATE INTERIOR & EXTERIOR OF VESSEL.
7.) DYE PEN – SHELL TO BOTTOM SEAM & ALL SHELL NOZZLES
8.) (1) SPOT ON ANY ONE LS.

REVISIONS

REV	D.BY	C.BY	DATE	DESCRIPTION
				AS BUILT
2	AD	–	5/22/25	CERTIFIED
1	RS	NP	4/10/25	APPROVAL REV 1
0	AD	RS	2/13/25	APPROVAL

Savannah Tank & Equipment Corp.
1517 Telfair Road, Savannah, GA 31415
(912) 233-8902

DRAWN BY: AD
CHK'D BY: RS
APPROVED BY: NP
SCALE: 1/2" = 1'-0"

IRVING
DB TAD SEAL POT
EQUIP. #010-1036-TAN-004-00
CUST. PO #20615990

DRAWING NO.: 036-25-1 SHT 1 OF 2 REV. SET 2

FC-14

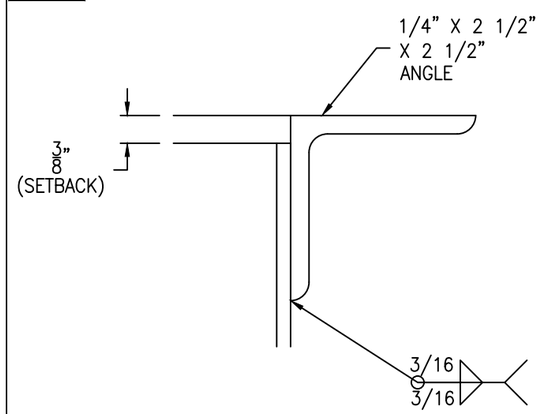

RIM ANGLE DETAIL

SCALE: 8" = 1'-0"

FC-14

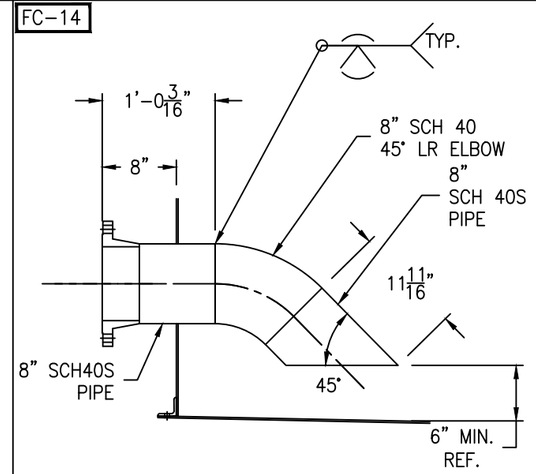

NOZZLE N4 DETAIL

SCALE: 1" = 1'-0"

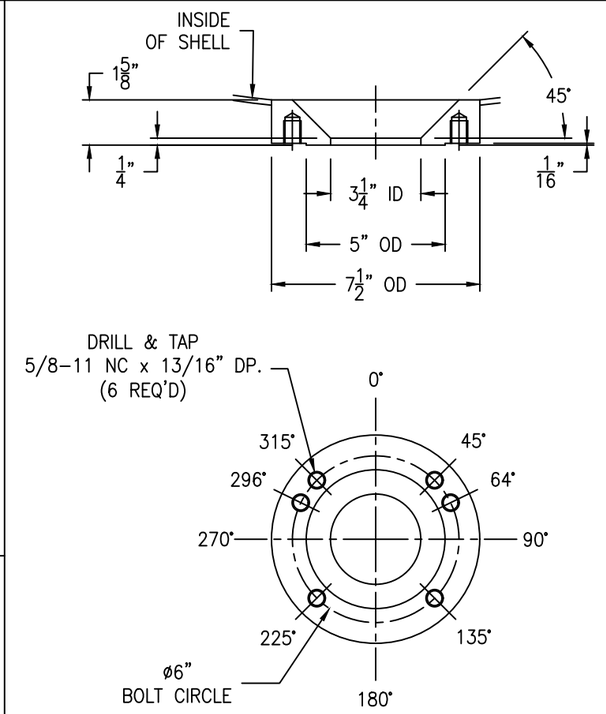

NOZZLE N3 DETAIL

SCALE: 3" = 1'-0"

FC-14

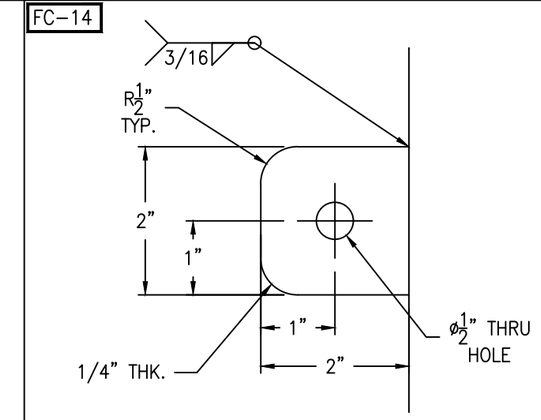

LUGS LOCATED AT 30°, 120°, 210° & 300°

GROUND LUG DETAIL

(4 REQ'D) SCALE: 8" = 1'-0"

FC-14

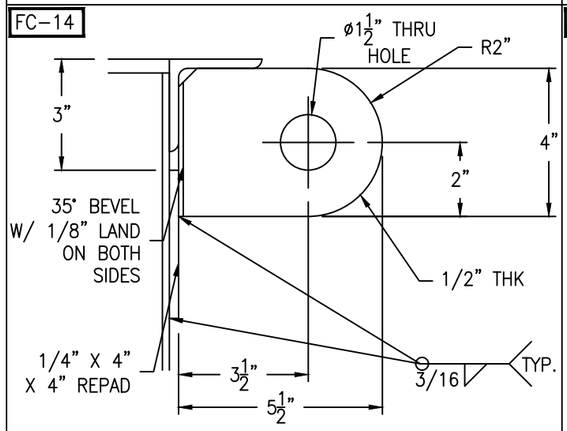

TANK WT. <= 5000#

SHACKLE PIN DIA. = 1"

LIFT LUG DETAIL

(2 REQ'D) SCALE: 4" = 1'-0"

FC-14 NOTE: CUT ANGLE 1" AWAY FROM NOZZLE

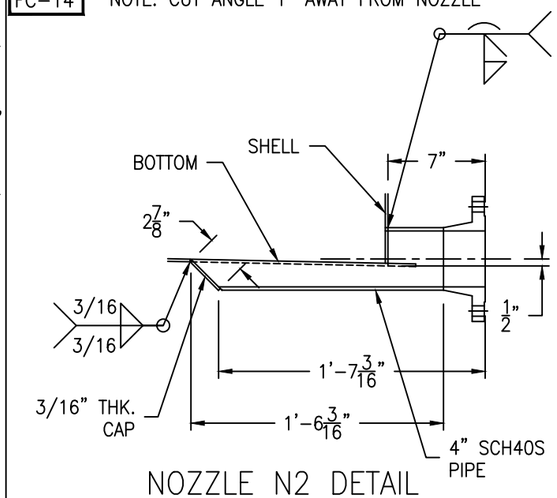

NOZZLE N2 DETAIL

SCALE: 1 1/2" = 1'-0"

FC-14

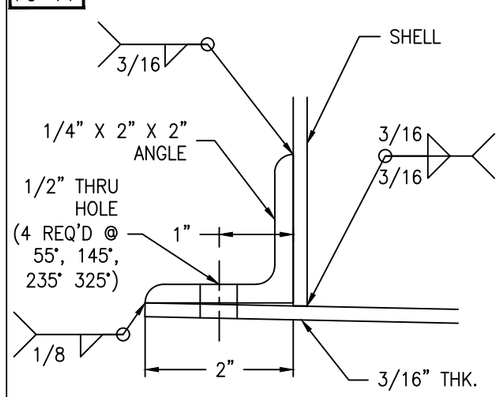

* NOTE: BOTTOM TO SLOPE 1/4" TO EVERY 1'-0"

SLOPE BOTTOM DETAIL

SCALE: 8" = 1'-0"

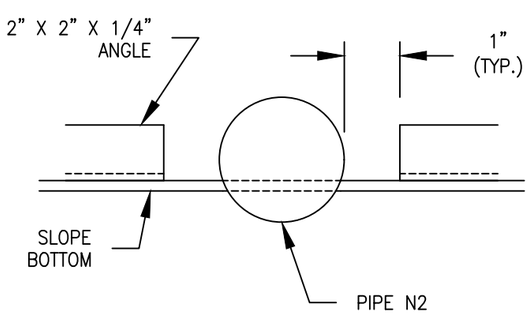

NOZZLE N2 CUTOUT DETAIL

SCALE: 6" = 1'-0"

IPC DWG NO. 010-1036-094

REV	D.BY	C.BY	DATE	DESCRIPTION
				AS BUILT
2	AD	–	5/22/25	CERTIFIED
1	RS	NP	4/10/25	APPROVAL
0	AD	RS	2/13/25	APPROVAL

△1 REVISIONS

Savannah Tank & Equipment Corp.
1517 Telfair Road, Savannah, GA 31415
(912) 233-8902

DRAWN BY: AD
CHK'D BY: RS
APPROVED BY: NP
SCALE: 1/2" = 1'-0"

IRVING
DB TAD SEAL POT
EQUIP. #010-1036-TAN-004-00
CUST. PO #20615990

DRAWING NO.: 036-25-2 SHT 2 OF 2 REV. SET 2